KF100 - 005 - S2 / KOLLMORGEN AKM52H-HN-320VDC

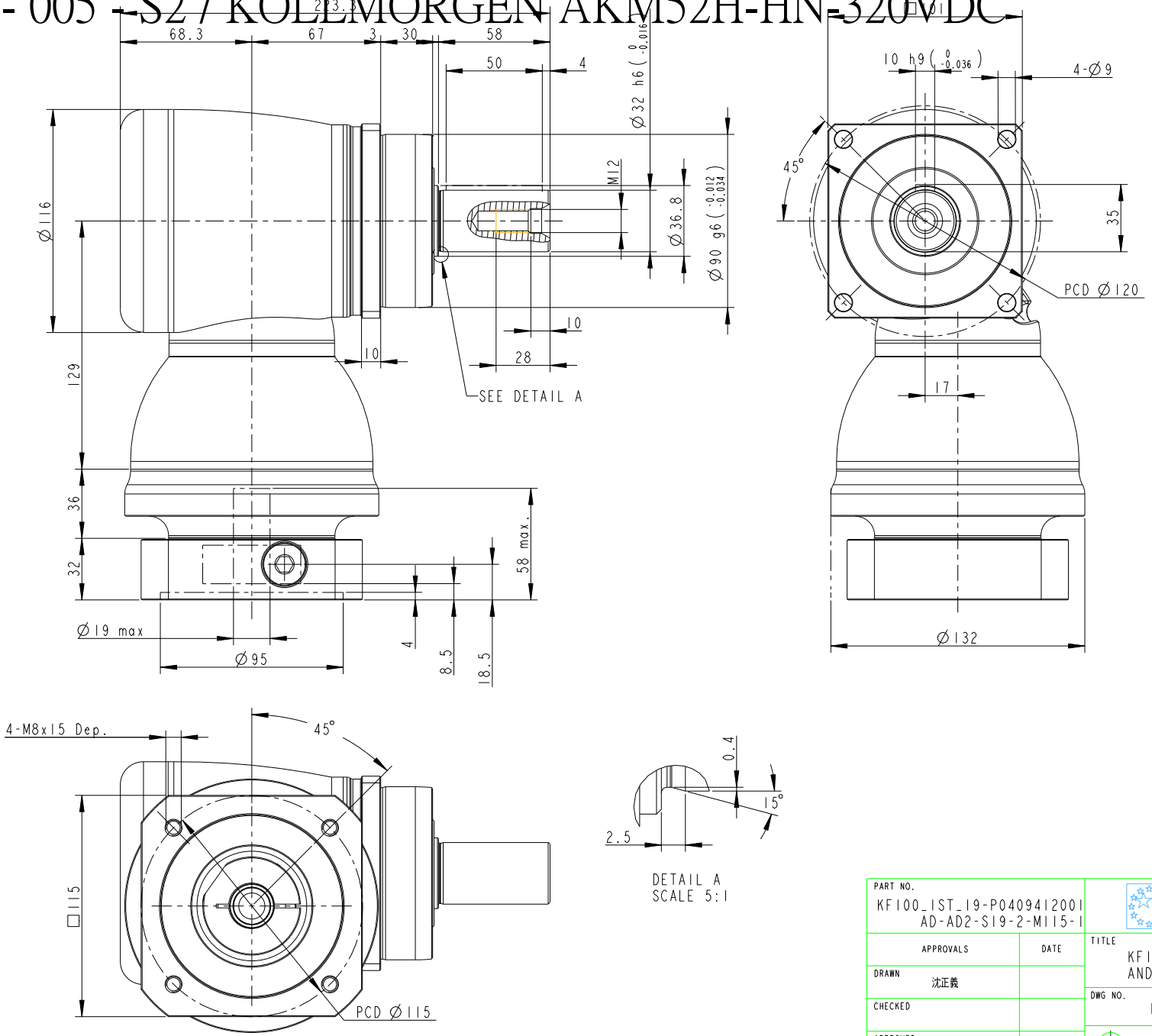

PART NO. KF100_1ST_19-P0409412001 AD-AD2-S19-2-M115-1		APEX DYNAMICS, INC.
APPROVALS	DATE	TITLE KF100_1 Stage_S19 , RATIO= 3~10 AND MOTOR FLANGE MOUNTING
DRAWN 沈正義		DWG NO. KF100_1ST_19-P0409412001
CHECKED		
APPROVED		SIZE A1 / SCALE 1:1 / REV